This document must not be copied without our written permission and the contents thereof must not be imparted to a third party nor be used for any unauthorized purpose. Contravention will be prosecuted.

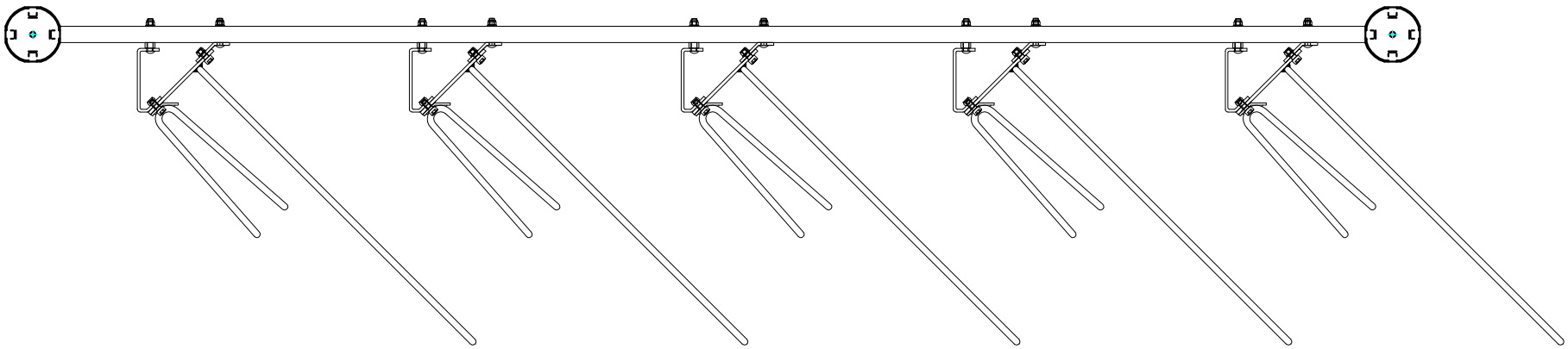

Det.nr	Ant.	Benämning	Material	Mod.nr.ämne dimension	Anm.
—	—	—	—	—	—

Konstr.	Ritad	Kop.	Kontr.	Stand.	Format	Skala	Generell tolerans
—	EM	—	—	—	A4	1:12	—

ZENZO MILJØ
PART OF BIOBAG GROUP

Bike sykkelstativ enkel, skrå 45 gr. hjulholdere og Rambo låsebøyle 500 c/c

Objektnummer	Datum
—	160429

Ritningsnummer	Rev.
—	—

Nr.	Ant.	Ändring och/eller medd.–nr	Datum	Inf.	Godk.